ANSI/ISA-S5.1-1984
Approved November 5, 1986

American National Standard

Instrumentation Symbols and Identification

Instrument Society of America

1 PURPOSE

The purpose of this standard is to establish a uniform means of designating instruments and instrumentation systems used for measurement and control. To this end, a designation system that includes symbols and an identification code is presented.

TYPICAL TAG NUMBER

TIC 103.	-	Instrument Identification or Tag Number
T 103	-	Loop Identification
103	-	Loop Number
TIC	-	Functional Identification
T	-	First-letter
IC	-	Succeeding-Letters

EXPANDED TAG NUMBER

10-PAH-5A	-	Tag Number
10	-	Optional Prefix
A	-	Optional Suffix

Note: Hyphens are optional as separators.

TABLE 1
IDENTIFICATION LETTERS

	FIRST-LETTER (4)		SUCCEEDING-LETTERS (3)		
	MEASURED OR INITIATING VARIABLE	MODIFIER	READOUT OR PASSIVE FUNCTION	OUTPUT FUNCTION	MODIFIER
A	Analysis(5,19)		Alarm		
B	Burner, Combustion		User's Choice(1)	User's Choice(1)	User's Choice(1)
C	User's Choice(1)			Control(13)	
D	User's Choice(1)	Differential(4)			
E	Voltage		Sensor (Primary Element)		
F	Flow Rate	Ratio (Fraction)(4)			
G	User's Choice(1)		Glass, Viewing Device(9)		
H	Hand				High(7,15,16)
I	Current (Electrical)		Indicate(10)		
J	Power	Scan(7)			
K	Time, Time Schedule	Time Rate of Change(4,21)		Control Station (22)	
L	Level		Light(11)		Low(7,15,16)
M	User's Choice(1)	Momentary(4)			Middle, Intermediate(7,15)
N	User's Choice(1)		User's Choice(1)	User's Choice(1)	User's Choice(1)
O	User's Choice(1)		Orifice, Restriction		
P	Pressure, Vacuum		Point (Test) Connection		
Q	Quantity	Integrate, Totalize(4)			
R	Radiation		Record(17)		
S	Speed, Frequency	Safety(8)		Switch(13)	
T	Temperature			Transmit(18)	
U	Multivariable(6)		Multifunction(12)	Multifunction(12)	Multifunction(12)
V	Vibration, Mechanical Analysis(19)			Valve, Damper, Louver(13)	
W	Weight, Force		Well		
X	Unclassified(2)	X Axis	Unclassified(2)	Unclassified(2)	Unclassified(2)
Y	Event, State or Presence(20)	Y Axis		Relay, Compute, Convert(13,14,18)	
Z	Position, Dimension	Z Axis		Driver, Actuator, Unclassified Final Control Element	

Note: Numbers in parentheses refer to specific explanatory notes on pages 15 and 16.

5.3

Table 2 — Typical Letter Combinations

First-Letters	Initiating or Measured Valable	Controllers				Readout Devices		Switches and Alarm Devices*			Transmitters			Solenoids, Relays, Computing Devices	Primary Element	Test Point	Well or Probe	Viewing Device, Glass	Safety Device	Final Element
		Recording	Indicating	Blind	Self-Actuated Control Valves	Recording	Indicating	High**	Low	Comb	Recording	Indicating	Blind							
A	Analysis	ARC	AIC	AC		AR	AI	ASH	ASL	ASHL	ART	AIT	AT	AY	AE	AP	AW			AV
B	Burner/Combustion	BRC	BIC	BC		BR	BI	BSH	BSL	BSHL	BRT	BIT	BT	BY	BE		BW	BG		BZ
C	User's Choice																			
D	User's Choice																			
E	Voltage	ERC	EIC	EC		ER	EI	ESH	ESL	ESHL	ERT	EIT	ET	EY	EE					EZ
F	Flow Rate	FRC	FIC	FC	FCV, FICV	FR	FI	FSH	FSL	FSHL	FRT	FIT	FT	FY	FE	FP		FG		FV
FQ	Flow Quantity	FQRC	FQIC			FQR	FQI	FQSH	FQSL			FQIT	FQT	FQY	FQE					FQV
FF	Flow Ratio	FFRC	FFIC	FFC		FFR	FFI	FFSH	FFSL						FE					FFV
G	User's Choice																			
H	Hand		HIC	HC						HS										HV
I	Current	IRC	IIC			IR	II	ISH	ISL	ISHL	IRT	IIT	IT	IY	IE					IZ
J	Power	JRC	JIC			JR	JI	JSH	JSL	JSHL	JRT	JIT	JT	JY	JE					JV
K	Time	KRC	KIC	KC	KCV	KR	KI	KSH	KSL	KSHL	KRT	KIT	KT	KY	KE					KV
L	Level	LRC	LIC	LC	LCV	LR	LI	LSH	LSL	LSHL	LRT	LIT	LT	LY	LE		LW	LG		LV
M	User's Choice																			
N	User's Choice																			
O	User's Choice																			
P	Pressure/ Vacuum	PRC	PIC	PC	PCV	PR	PI	PSH	PSL	PSHL	PRT	PIT	PT	PY	PE	PP			PSV, PSE	PV
PD	Pressure, Differential	PDRC	PDIC	PDC	PDCV	PDR	PDI	PDSH	PDSL		PDRT	PDIT	PDT	PDY	PE	PP				PDV
Q	Quantity	QRC	QIC			QR	QI	QSH	QSL	QSHL	QRT	QIT	QT	QY	QE					QZ
R	Radiation	RRC	RIC	RC		RR	RI	RSH	RSL	RSHL	RRT	RIT	RT	RY	RE		RW			RZ
S	Speed/Frequency	SRC	SIC	SC	SCV	SR	SI	SSH	SSL	SSHL	SRT	SIT	ST	SY	SE					SV
T	Temperature	TRC	TIC	TC	TCV	TR	TI	TSH	TSL	TSHL	TRT	TIT	TT	TY	TE	TP	TW		TSE	TV
TD	Temperature, Differential	TDRC	TDIC	TDC	TDCV	TDR	TDI	TDSH	TDSL		TDRT	TDIT	TDT	TDY	TE	TP	TW			TDV
U	Multivariable					UR	UI							UY						UV
V	Vibration/Machinery Analysis					VR	VI	VSH	VSL	VSHL	VRT	VIT	VT	VY	VE					VZ
W	Weight/Force	WRC	WIC	WC	WCV	WR	WI	WSH	WSL	WSHL	WRT	WIT	WT	WY	WE					WZ
WD	Weight/Force, Differential	WDRC	WDIC	WDC	WDCV	WDR	WDI	WDSH	WDSL		WDRT	WDIT	WDT	WDY	WE					WDZ
X	Unclassified																			
Y	Event/State/Presence		YIC	YC		YR	YI	YSH	YSL				YT	YY	YE					YZ
Z	Position/Dimension	ZRC	ZIC	ZC	ZCV	ZR	ZI	ZSH	ZSL	ZSHL	ZRT	ZIT	ZT	ZY	ZE					ZV
ZD	Gauging/Deviation	ZDRC	ZDIC	ZDC	ZDCV	ZDR	ZDI	ZDSH	ZDSL		ZDRT	ZDIT	ZDT	ZDY	ZDE					ZDV

Note: This table is not all-inclusive.
*A, alarm, the annunciating device, may be used in the same fashion as S, switch, the actuating device.

**The letters H and L may be omitted in the undefined case. TJR

Other Possible Combinations:

FO	(Restriction Orifice)	PFR	(Ratio)
FRK, HIK	(Control Stations)	KQI	(Running Time Indicator)
FX	(Accessories)	QQI	(Indicating Counter)
(Scanning Recorder)WKIC		(Rate-of-Weight-Loss Controller)	
LLH	(Pilot Light)	HMS	(Hand Momentary Switch)

6.2 INSTRUMENT LINE SYMBOLS

ALL LINES TO BE FINE IN RELATION TO PROCESS PIPING LINES.

(1) INSTRUMENT SUPPLY *
OR CONNECTION TO PROCESS

(2) UNDEFINED SIGNAL

(3) PNEUMATIC SIGNAL **

(4) ELECTRIC SIGNAL OR

(5) HYDRAULIC SIGNAL

(6) CAPILLARY TUBE

(7) ELECTROMAGNETIC OR SONIC SIGNAL ***
(GUIDED)

(8) ELECTROMAGNETIC OR SONIC SIGNAL ***
(NOT GUIDED)

(9) INTERNAL SYSTEM LINK
(SOFTWARE OR DATA LINK)

(10) MECHANICAL LINK

OPTIONAL BINARY (ON-OFF) SYMBOLS

(11) PNEUMATIC BINARY SIGNAL

(12) ELECTRIC BINARY SIGNAL OR

NOTE: 'Or' means user's choice. Consistency is recommended.

* The following abbreviations are suggested to denote the types of power supply. These designations may also be applied to purge fluid supplies.

AS - Air Supply
IA - Instrument Air } Options
PA - Plant Air
ES - Electric Supply
GS - Gas Supply

HS - Hydraulic Supply
NS - Nitrogen Supply
SS - Steam Supply
WS - Water Supply

The supply level may be added to the instrument supply line, e.g., AS-100, a 100-psig air supply; ES-24DC, a 24-volt direct current power supply.

** The pneumatic signal symbol applies to a signal using any gas as the signal medium. If a gas other than air is used, the gas may be identified by a note on the signal symbol or otherwise.

*** Electromagnetic phenomena include heat, radio waves, nuclear radiation, and light.

6.3 GENERAL INSTRUMENT OR FUNCTION SYMBOLS

	PRIMARY LOCATION *** NORMALLY ACCESSIBLE TO OPERATOR	FIELD MOUNTED	AUXILIARY LOCATION *** NORMALLY ACCESSIBLE TO OPERATOR
DISCRETE INSTRUMENTS	1 * IP1 **	2	3
SHARED DISPLAY, SHARED CONTROL	4	5	6
COMPUTER FUNCTION	7	8	9
PROGRAMMABLE LOGIC CONTROL	10	11	12

* Symbol size may vary according to the user's needs and the type of document. A suggested square and circle size for large diagrams is shown above. Consistency is recommended.

** Abbreviations of the user's choice such as IP1 (Instrument Panel #1), IC2 (Instrument Console #2), CC3 (Computer Console #3), etc., may be used when it is necessary to specify instrument or function location.

*** Normally inaccessible or behind-the-panel devices or functions may be depicted by using the same symbols but with dashed horizontal bars, i.e.

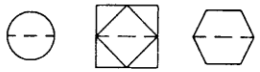

6.4 CONTROL VALVE BODY SYMBOLS, DAMPER SYMBOLS

1 GENERAL SYMBOL	2 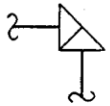 ANGLE	3 BUTTERFLY	4 ROTARY VALVE
5 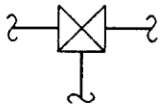 THREE-WAY	6 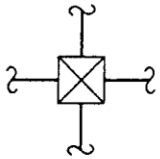 FOUR-WAY	7 GLOBE	8
9 DIAPHRAGM	10 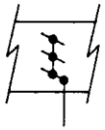	11 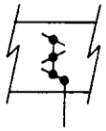	12 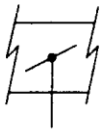
	DAMPER OR LOUVER		

Further information may be added adjacent to the body symbol either by note or code number.

6.12 EXAMPLE - DEGREE OF DETAIL *

I TYPICAL SYMBOLISM FOR SIMPLIFIED DIAGRAMS

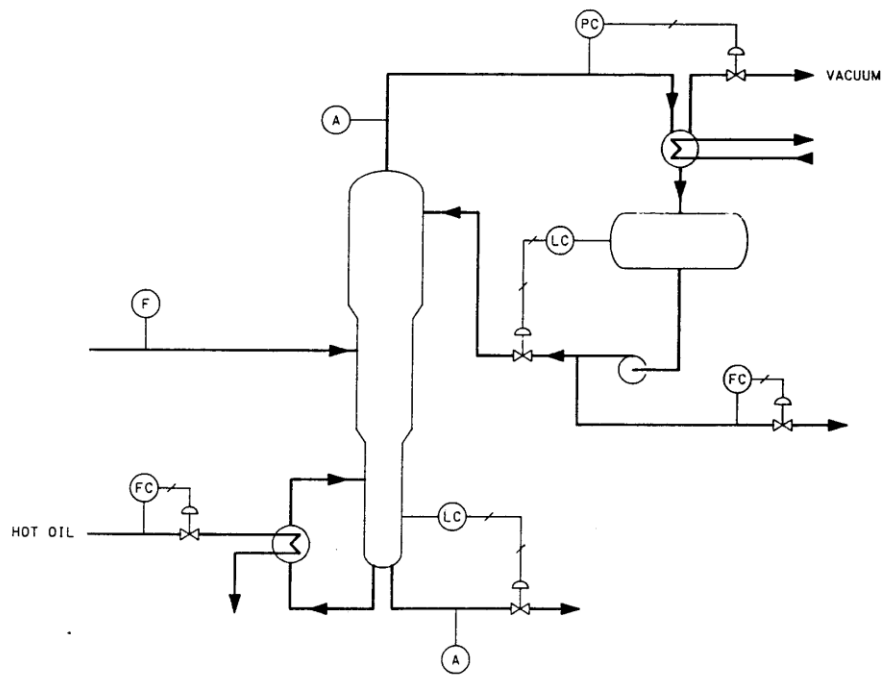

Simplified symbolism and abbreviated identification used to define the principal points of measurement and control interest.

* SEE SECTION 4.4 FOR DISCUSSION

6.12 EXAMPLE - DEGREE OF DETAIL *

2 TYPICAL SYMBOLISM FOR CONCEPTUAL DIAGRAMS

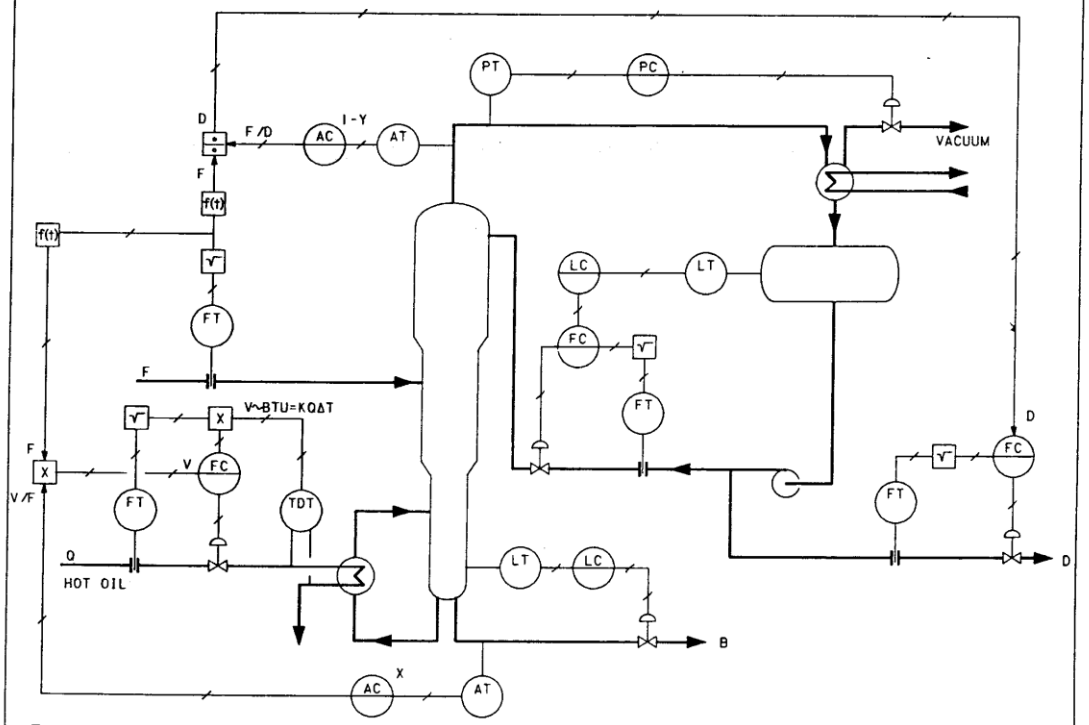

Functionally oriented symbolism and abbreviated identification used to develop control concepts without concern for specific hardware.

* SEE SECTION 4.4 FOR DISCUSSION

6.12 EXAMPLE - DEGREE OF DETAIL *

3 TYPICAL SYMBOLISM FOR DETAILED DIAGRAMS

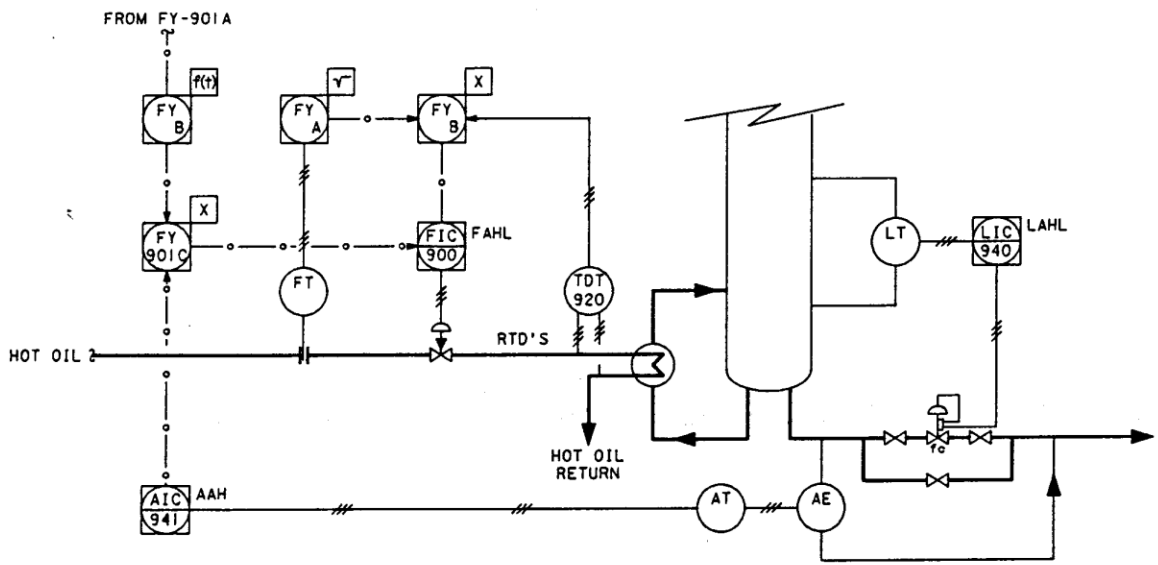

Detailed symbolism and more complete identification used to describe the control system when the type of hardware and kinds of signals have been chosen.

* SEE SECTION 4.4 FOR DISCUSSION