ANSI/ISA-TR67.04.08-1996

Approved March 21, 1996

Technical Report

Setpoints for Sequenced Actions

ANSI/ISA-TR67.04.08 — Setpoints for Sequenced Actions

ISBN: 1-55617-591-4

ISA
67 Alexander Drive
P.O. Box 12277
Research Triangle Park, North Carolina 27709

Preface

The information contained in the preface, footnotes, and annexes is included for information only and is not part of ISA-TR67.04.08.

This Technical Report has been prepared as part of the service of ISA, the international society for measurement and control, toward a goal of uniformity in the field of instrumentation. To be of real value, this document should not be static but should be subject to periodic review. Toward this end, the Society welcomes all comments and criticisms and asks that they be addressed to the Secretary, Standards and Practices Board; ISA; 67 Alexander Drive; P. O. Box 12277; Research Triangle Park, NC 27709; Telephone (919) 549-8411; Fax (919) 549-8288; E-mail: standards@isa.org.

The ISA Standards and Practices Department is aware of the growing need for attention to the metric system of units in general, and the International System of Units (SI) in particular, in the preparation of instrumentation standards, recommended practices, and technical reports. The Department is further aware of the benefits to USA users of ISA standards of incorporating suitable references to the SI (and the metric system) in their business and professional dealings with other countries. Toward this end, this Department will endeavor to introduce SI and acceptable metric units in all new and revised standards to the greatest extent possible. *The Metric Practice Guide*, which has been published by the Institute of Electrical and Electronics Engineers as ANSI/IEEE Std. 268-1992, and future revisions, will be the reference guide for definitions, symbols, abbreviations, and conversion factors.

It is the policy of ISA to encourage and welcome the participation of all concerned individuals and interests in the development of ISA standards, recommended practices, and technical reports. Participation in the ISA standards-making process by an individual in no way constitutes endorsement by the employer of that individual, of ISA, or of any of the standards, recommended practices, and technical reports that ISA develops.

The following people served as members of ISA Subcommittee SP67.04:

NAME	COMPANY
*T. Hurst, Chairman	Hurst Consulting Inc.
C. Sossman, Vice Chairman	Westinghouse Savannah River Company
*R. Webb, Managing Director	Pacific Gas & Electric Company
M. Adler	EG&G Rocky Flats, Inc.
T. Albrigo	Arizona Public Service Company
D. Alexander	Detroit Edison Company
*R. Allen	ABB Combustion Engineering, Inc.
J. Alvis	Vectra Tech, Inc.
*J. Arpin	ABB Combustion Engineering, Inc.
R. Atkisson	Proto-Power Corporation
*B. Basu	Southern California Edison Company
L. Bates	ENSTAT, Inc.
F. Berté	Tetra Engineering Group, Inc.

*One vote per company

NAME	COMPANY
B. Beuchel	NAESCO
P. Blanch	Consultant
*R. Bockhorst	Southern California Edison Company
W. Brown	ISD Corporation
R. Burnham	Northeast Utilities Service Company
M. Burns	Arizona Public Service Company
T. Burton	INPO
*G. Butera	Baltimore Gas & Electric Company
*J. Carolan	PECO Energy Company
G. Cary	Omaha Public Power District
J. Cash	Control Associates
*R. Chan	Public Service Electric & Gas Company
Q. Chou	Ontario Hydro
*G. Cooper	Commonwealth Edison Company
L. Costello	Carolina Power & Light Company
D. Cottingham	Entergy Operations, Inc.
C. Cristallo, Jr.	Northeast Utilities
*W. Croft	Westinghouse Savannah River Company
W. Crumbacker	Sargent & Lundy Engineers
D. Desai	Consolidated Edison of NY, Inc.
T. Donat	PG&E
C. Doyle	Florida Power Corporation
M. Edison	Southern Nuclear Operating Company
S. Eschbach	B&W Advanced Systems Engineering
*R. Estes	Hurst Consulting
N. Evans	ISA
R. Fain	Analysis & Measurement Services
R. Fredricksen	New York Power Authority
*V. Fregonese	Public Service Electric & Gas Company
D. Gantt	Westinghouse Hanford Company
R. George	PECO Energy
*S. Ghbein	Washington Public Power Supply System
W. Gordon	Consultant
*R. Gotcher	Weed Instrument Company
R. Gregory	ISA
E. Gross	Wisconsin Electric Power Company
R. Hakeem	Entergy Operations Inc.
D. Harding	Proto-Power Corporation
H. Hashemian	Analysis & Measurement Services Corporation
B. Haynes	Hurst Consulting, Inc.
W. Hinton	North Atlantic Energy Service Corporation
*E. Hubner	Stone & Webster, Inc.
*J. James	Stone & Webster, Inc.
*S. Jannetty	Public Service Electric & Gas Company
R. Jarrett	Tennessee Valley Authority
S. Kincaid	K & K Services
W. Kramer	Bettis Atomic Power Laboratory
T. Kulaga	T&T Engineering Company

*One vote per company

NAME	COMPANY
T. Layer	Rosemount Nuclear Instruments Inc.
L. Lemons	Pacific Gas & Electric Company
*P. Loeser	U.S. Nuclear Regulatory Commission
*J. Long	Bechtel Corporation
K. Lyall	Duke Power Company
B. Marrow	Duke Power Company
*J. Mauck	U.S. Nuclear Regulatory Commission
W. McBride	Virginia Power
B. McMillen	Nebraska Public Power District
*C. McNall	Consultant
*J. McQuighan	Baltimore Gas & Electric Company
D. Miller	Ohio State University
G. Minor	MHB Technical Associates
*J. Mock	Bechtel Corporation
U. Mondal	Ontario Hydro
W. Morrison	TU Electric - CPSES
R. Neustadter	Raytheon Engineers & Construction, Inc.
S. Nix	Northeast Utilities
J. O'Connell	Technicon Enterprises
J. Osborne	Florida State & Light
J. Peternel	SOR
*R. Plotnick	Stone & Webster, Inc.
W. Powell	Consultant
R. Profeta	S. Levy, Inc.
R. Queenan	Pacific Nuclear
E. Quinn	NR Engineering
S. Rabinovich	Consultant
*T. Reynolds	Weed Instrument Company
D. Ringland	Foxboro Company
S. Roberson	Onsite Engineering & Management
L. Sandlin	Entergy Operations Inc.
J. Dougherty-Sandstrom	Rosemount Nuclear Instruments, Inc.
R. Sawaya	Northern States Power Company
J. Scheetz	Pacific Engineering Corporation
R. Schwartzbeck	Enercon Services, Inc.
J. Shank	PSE&G
T. Slavic	Duquesne Light Company
I. Smith	Campbell Love Associates
C. Sorensen	Southern Company Services
W. Sotos	Hurst Consulting, Inc.
K. Stevens	Consumers Power Company
R. Stevens	U.S. Department of Energy
B. Sun	Electric Power Research Institute
R. Szoch	Baltimore Gas & Electric Company
W. Trenholme	Consultant
*C. Tuley	Westinghouse Electric Corporation
J. Turnbull	ITT Barton
P. VandeVisse	Commonwealth Edison Company

*One vote per company

NAME	COMPANY
T. Verbout	Northern States Power
*J. Voss	Isys Consulting, Inc.
*S. Weldon	Evergreen Technical Services, Inc.
R. Westerhof	Consumers Power Company
*P. Wicyk	Commonwealth Edison Company
*M. Widmeyer	Washington Public Power Supply System
*H. Wiegle	Canus Corporation
V. Willems	Gilbert Commonwealth
D. Wilmer	General Electric Company
B. Woodruff	Florida Power & Light Company

The following people served as members of ISA Committee SP67:

NAME	COMPANY
*H. Wiegle, Chairman	Canus Corporation
W. Sotos, Vice Chairman	Hurst Consulting, Inc.
*R. Webb, Managing Director	Pacific Gas & Electric Company
D. Alexander	Detroit Edison Company
R. Allen	ABB Combustion Engineering, Inc.
C. Armstrong	SAIC
B. Basu	Southern California Edison Company
J. Bauer	General Atomics Company
*M. Berkovich	Bechtel Power Corporation
B. Beuchel	NAESCO
P. Blanch	Consultant
W. Brown	ISD Corporation
T. Burton	INPO
Q. Chou	Ontario Hydro
G. Cooper	Commonwealth Edison Company
W. Croft	Westinghouse Savannah River Company
F. Cunningham	Swagelok Company
R. Dulski	Conax Buffalo Corporation
R. Estes	Hurst Engineering, Inc.
N. Evans	ISA
V. Fregonese	Public Service Electric & Gas
*R. George	PECO Energy Company
*R. Givan	Sargent & Lundy Engineers
W. Gordon	Consultant
R. Gotcher	Process Controls & Measurements
E. Gross	Wisconsin Electric Power Company
*S. Hedden	Commonwealth Edison Company
*K. Herman	Pacific Gas & Electric Company
*R. Hindia	Sargent & Lundy Engineers
E. Hubner	Stone & Webster, Inc.
T. Hurst	Hurst Consulting, Inc.

*One vote per company

NAME	COMPANY
J. Lipka	Consultant
*P. Loeser	U.S. Nuclear Regulatory Commission
A. Machiels	Electric Power Research Institute
*J. Mauck	U.S. Nuclear Regulatory Commission
B. McMillen	Nebraska Public Power District
L. McNeil	INPO
D. Miller	Ohio State University
G. Minor	MHB Technical Associates
*J. Mock	Bechtel Power Corporation
J. Nay	Westinghouse CNFD
*R. Naylor	Commonwealth Edison Company
R. Neustadter	Raytheon Engineers & Constructors, Inc.
J. Peternel	SOR
R. Profeta	S. Levy, Inc.
E. Quinn	NR Engineering
J. Redmon	Southern California Edison
D. Ringland	Foxboro Company
L. Sandlin	Entergy Operations Inc.
C. Scott	NR Engineering Inc.
G. Sensmeier	Sargent & Lundy
T. Slavic	Duquesne Light Company
I. Smith	Campbell Love Associates
R. Stevens	U.S. Department of Energy
*I. Sturman	Retired
W. Trenholme	Consultant
C. Tuley	Westinghouse Electric Corporation
T. Verbout	Northern States Power
W. Wellborn	Houston Lighting & Power
P. Wicyk	Commonwealth Edison Company
M. Widmeyer	Washington Public Power Supply System
F. Zikas	Parker-Hannifin Corporation

This technical report was approved for publication by the ISA Standards and Practices Board on March 21, 1996.

NAME	COMPANY
M. Widmeyer, Vice President	Washington Public Power Supply System
H. Baumann	H. D. Baumann, Inc.
D. Bishop	Chevron USA Production Company
P. Brett	Honeywell Industrial Automation Controls
W. Calder III	Calder Enterprises
H. Dammeyer	Phoenix Industries, Inc.
R. Dieck	Pratt & Whitney
W. Holland	Southern Company Services, Inc.
A. Iverson	Lyondell Petrochemical Company

*One vote per company

NAME	COMPANY
K. Lindner	Endress + Hauser GmbH + Company
T. McAvinew	Metro Wastewater Reclamation District
A. McCauley, Jr.	Chagrin Valley Controls, Inc.
G. McFarland	Honeywell Industrial Automation Controls
E. Montgomery	Fluor Daniel, Inc.
D. Rapley	Rapley Engineering Services
R. Reimer	Rockwell Automation A-B
J. Rennie	Factory Mutual Research Corporation
R. Webb	Pacific Gas & Electric Company
W. Weidman	Consultant
J. Weiss	Electric Power Research Institute
J. Whetstone	National Institute of Standards & Technology
H. Wiegle	Canus Corporation
C. Williams	Eastman Kodak Company
G. Wood	Graeme Wood Consulting
M. Zielinksi	Fisher•Rosemount

Foreword

In the preparation of an earlier version of ANSI/ISA-S67.04-Part I-1994 it was deemed necessary to provide additional guidance regarding methods for implementing the standard. In order to address this need, Standard Subcommittee SP67.15 was formed in 1988 (later incorporated into SP67.04) and has prepared a recommended practice (ISA-RP67.04-Part II-1994). It was the intent of SP67.04 that the recommended practice's scope be consistent with the standard's scope.

The recommended practice represents guidelines and examples of methods for the implementation of ANSI/ISA-S67.04 in order to facilitate the performance of instrument uncertainty calculations and setpoint determination for safety-related instrument setpoints in nuclear power plants.

However, the recommended practice could not adequately cover all of the topics related to setpoint uncertainties without becoming too voluminous a document. This Technical Report is one in a series that supplements the recommended practice and standard.

The topic of setpoints for sequenced actions is one that came up too late in the process of preparation for the recommended practice to be included in the 1994 issue. This Technical Report represents work in progress in this area that may be incorporated into a future revision of the recommended practice.

Abstract

This Technical Report supplements ANSI/ISA-S67.04-Part I-1994 and ISA-RP67.04-Part II-1994 in the area of methods used to determine instrument setpoints for sequenced actions.

Key Words

Error Identification, Instrumentation, Instrument Setpoints, Minimum Separation, Sequenced Actions, Setpoint Calculation, Standards, Uncertainty Determination.

Contents

Figures

1 Scope

This Technical Report provides guidance on the handling of setpoints for sequenced actions in both nuclear safety-related and nuclear power plant non-safety-related instrumentation.

2 Purpose

The purpose of this Technical Report is to supplement the information provided in ANSI/ISA-S67.04-Part I-1994, *Setpoints for Nuclear Safety-Related Instrumentation*, and ISA-RP67.04-Part II-1994, *Methodologies for the Determination of Setpoints for Nuclear Safety-Related Instrumentation*, for the performance of instrument uncertainty calculations and instrument setpoint determinations. Specifically, the topics addressed in this Technical Report expand on the discussion of Sections 7 (Establishment of Setpoints) and 9 (Interfaces) of ISA-RP67.04, Part II.

3 Definitions

3.1 applicable uncertainty (AU): That portion of the channel uncertainty which is applicable to a calculation of the minimum separation between setpoints.

3.2 bistable uncertainty (BU): That portion of the channel uncertainty which is due to uncorrected possible errors associated only with the bistable.

3.3 channel uncertainty (CU): The total amount to which an instrument channel's output is in doubt (or the allowance made therefore) due to possible errors, either random or systematic, that have not been corrected for. The uncertainty is generally identified within a probability and confidence level. (ISA-RP67.04, Part II)

3.4 earliest actuation (ACTN) point: The value closest to the normal operating point of the process variable at which a bistable or channel could be expected to actuate.

3.5 latest actuation (ACTN) point: The value farthest from the normal operating point of the process variable at which a bistable or channel could be expected to actuate.

3.6 reset deadband (DB): The range through which an input can be varied, upon reversal of direction, without initiating an observable change in output.

4 Discussion

In some instrument systems, the manual and/or automatic actions must occur in a given sequence. As a case in point, when both a pre-trip alarm action and a trip action are required, the setpoint for the first action must take into consideration the uncertainties associated with both setpoints, as well as the time responses of both equipment and human operators. In other cases, such as a system having both high and low setpoints, the reset deadbands of bistable devices must be considered.

Another case illustrates the need to provide special treatment of setpoints where an initiation trip bistable is bypassed when the system pressure decreases. In such a situation, the initiation bypass is then automatically removed when the pressure increases. This bypass removal must be sequenced to occur after the initiation trip bistable resets, with the applicable uncertainties and other terms properly considered.

For each instrument system where sequenced actions must be addressed, there will be one or more minimum needed separation(s) between the setpoints involved. If two or more of the bistables share the same transmitter and one or more signal conditioner(s), and if the sequenced actions do not involve a traverse of the operating band, only those uncertainties associated with the bistables need to be considered in the calculation(s) of the required minimum separation(s) between the setpoints. Otherwise, some or all of the uncertainties associated with the transmitter and signal conditioners also will need to be used.

While the simplest way to calculate the minimum needed separation(s) between setpoints would be to combine all the applicable uncertainty, operational, and reset terms algebraically, the results would be more conservative than necessary. Therefore, in accordance with the methodology used in ISA-RP67.04, Part II, the random independent components of the uncertainty terms will be combined using the square-root-sum-of-squares (SRSS) method, with the bias components of the uncertainty terms and the other applicable bias terms combined algebraically.

The following subsections discuss methods for properly addressing the topic of setpoints for sequenced actions. Illustrative figures and equations for calculating the minimum separations between setpoints in a generalized system are presented; then several typical types of systems are analyzed, with specific numerical examples provided to show how the minimum separations for some actual systems are calculated. The effects of system configuration on the calculated values are also discussed.

4.1 Minimum separations between setpoints

For the generalized instrument system shown in Figure 1, calculations of the minimum separations between setpoints for sequenced actions must consider terms such as those illustrated in Figure 2.

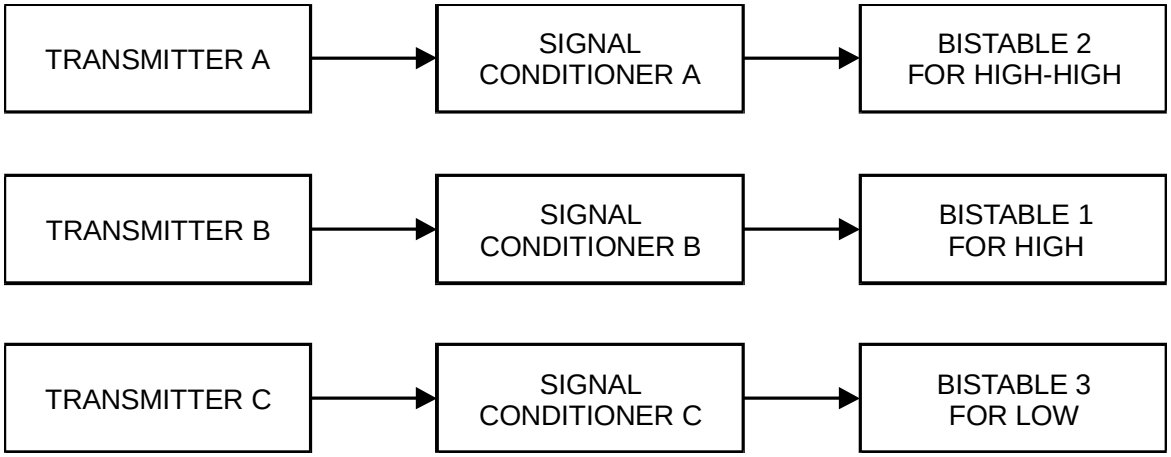

Figure 1 — Instrument channel layout for the generalized system

The various uncertainty terms in Figure 2 have superscripted "–" and "+" signs to indicate whether the uncertainties are for process variable values above or below their associated setpoints. The time response and reset deadband terms are shown overlapping the applicable uncertainty terms to illustrate the effects of the SRSS combinations of the random independent components.

In order to keep Figure 2 from becoming too complex, the random (R) and bias (B) components of the appropriate uncertainty terms have not been shown. The following equations define the breakup of these terms into their components:

$$AU_1^- = AU_{1R}^- + AU_{1B}^-$$

$$AU_2^+ = AU_{2R}^+ + AU_{2B}^+$$

$$AU_1^+ = AU_{1R}^+ + AU_{1B}^+$$

$$AU_3^- = AU_{3R}^- + AU_{3B}^-$$

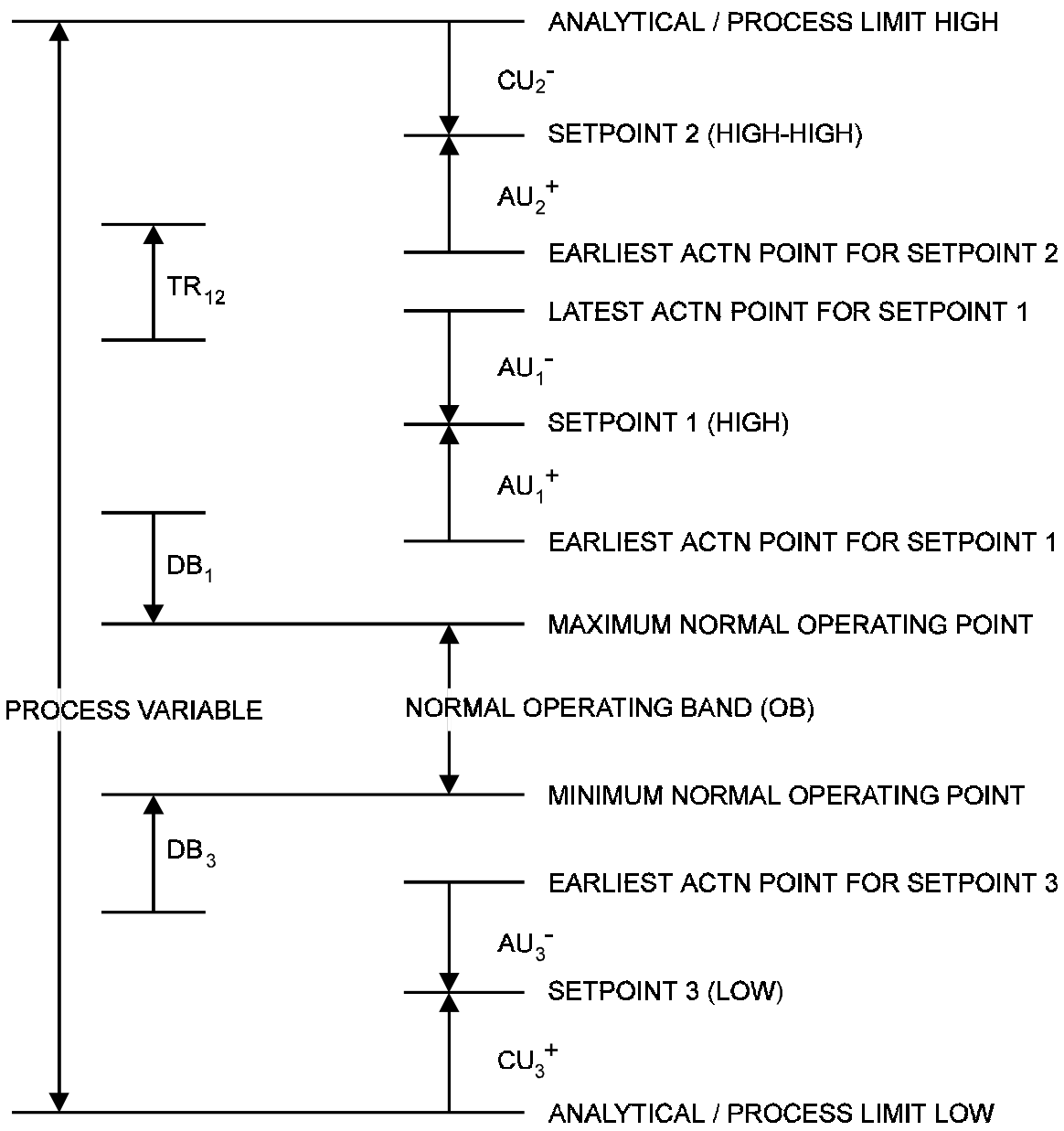

Figure 2 — Illustration of relationships that may apply in determining minimum separations of setpoints for sequenced actions

Referring to Figure 2 and the four defining equations provided, the minimum separations between the setpoints in the generalized system of Figure 1 are given by the following two equations:

$$SR_{12} = ([AU_{1R}^{-}]^2 + [AU_{2R}^{+}]^2)^{1/2} + AU_{1B}^{-} + AU_{2B}^{+} + TR_{12} \qquad \text{(Eq. 1)}$$

where

SR_{12} = minimum separation between setpoint 1, the high setpoint, and setpoint 2, the high-high setpoint;

AU_{1R}^{-} = random component of AU_1, the applicable uncertainty for setpoint 1, in the direction of setpoint 2;

AU_{2R}^{+} = random component of AU_2, the applicable uncertainty for setpoint 2, in the direction of setpoint 1;

AU_{1B}^{-} = bias component of AU_1 in the direction of setpoint 2;

AU_{2B}^{+} = bias component of AU_2 in the direction of setpoint 1; and

TR_{12} = additional bias separation between setpoint 1 and setpoint 2 due to time response(s), if applicable.

$$SR_{13} = ([AU_{1R}^{+}]^2 + [AU_{3R}^{-}]^2)^{1/2} + AU_{1B}^{+} + AU_{3B}^{-} + \max(DB_1, DB_3) + OB \qquad \text{(Eq. 2)}$$

where

SR_{13} = minimum separation between setpoint 1, the high setpoint, and setpoint 3, the low setpoint;

AU_{1R}^{+} = random component of AU_1, the applicable uncertainty for setpoint 1, in the direction of setpoint 3;

AU_{3R}^{-} = random component of AU_3, the applicable uncertainty for setpoint 3, in the direction of setpoint 1;

AU_{1B}^{+} = bias component of AU_1 in the direction of setpoint 3;

AU_{3B}^{-} = bias component of AU_3 in the direction of setpoint 1;

DB_1 = reset deadband for setpoint 1;

DB_3 = reset deadband for setpoint 3; and

OB = normal operating band of the process variable.

The reason for including the maximum of DB_1 or DB_3 in the equation for SR_{13} is to prevent an overlap between the reset of setpoint 1 and the actuation of setpoint 3, or between the reset of setpoint 3 and the actuation of setpoint 1. Only one of the deadbands is effective for a given process variable excursion up or down, and the one that is larger should be used for conservatism.

The inclusion of an OB term in Equation 2, while not theoretically required for the determination of the minimum separation SR_{13}, is necessary in practice because some allowance must be made for the operating band of the process variable. There are several factors that may affect the size of the normal operating band; a discussion of these is beyond the scope of this Technical Report.

In Figure 1, separate transmitters and signal conditioners are shown for each bistable, but this is often not the case when a single process variable is involved. If bistables 1 and 2 of Figure 1 should both be driven by the same transmitter and signal conditioner, the applicable uncertainties AU_1^- and AU_2^+ shown in Figure 2 will become the bistable uncertainties, as discussed earlier. Also, if bistables 1 and 3 of Figure 1 should both be driven by the same transmitter and signal conditioner, the applicable uncertainties AU_1^+ and AU_3^- shown in Figure 2 usually will become lower in value because of shared errors.

Figure 2 also shows the maximum and minimum normal operating points of the process variables, the earliest and latest actuation points for the setpoints, and the analytical/process limits, together with the associated channel uncertainties for an instrument system of the type shown in Figure 1. Channel uncertainties must always be applied between the analytical/ process limits and the setpoints closest to them.

4.2 Typical types of systems

4.2.1 Interrelating high pre-trip and high trip setpoints derived from the same transmitter

The instrument channel layout for this type of system is shown in Figure 3, and the setpoint relationships are illustrated in Figure 4. The high pre-trip setpoint may be used to generate an alarm indicating that the high trip setpoint is being approached. The minimum separation between setpoints may be expressed in an equation similar to Equation 1, with the applicable uncertainty AU_1^- becoming the bistable uncertainty BU_1^- for the high pre-trip setpoint, and the applicable uncertainty AU_2^+ becoming the bistable uncertainty BU_2^+ for the high trip setpoint.

The following equations define the breakup of the appropriate uncertainty terms in Figure 4 into their components:

$$BU_1^- = BU_{1R}^- + BU_{1B}^-$$

$$BU_2^+ = BU_{2R}^+ + BU_{2B}^+$$

The equation for minimum separation between setpoints in this type of system therefore becomes

$$SR_{12} = ([BU_{1R}^-]^2 + [BU_{2R}^+]^2)^{1/2} + BU_{1B}^- + BU_{2B}^+ + TR_{12} \qquad \text{(Eq. 3)}$$

where

SR_{12} = minimum separation between setpoint 1, the high pre-trip setpoint, and setpoint 2, the high trip setpoint;

BU_{1R}^- = random component of BU_1, the bistable uncertainty for the high pre-trip setpoint, in the direction of setpoint 2;

BU_{2R}^+ = random component of BU_2, the bistable uncertainty for the high trip setpoint, in the direction of setpoint 1;

BU_{1B}^- = bias component of BU_1 in the direction of setpoint 2;

BU_{2B}^+ = bias component of BU_2 in the direction of setpoint 1; and

TR_{12} = bias time response term to account for plant operator actions and equipment response times to avoid a high trip after receiving a high pre-trip alarm.

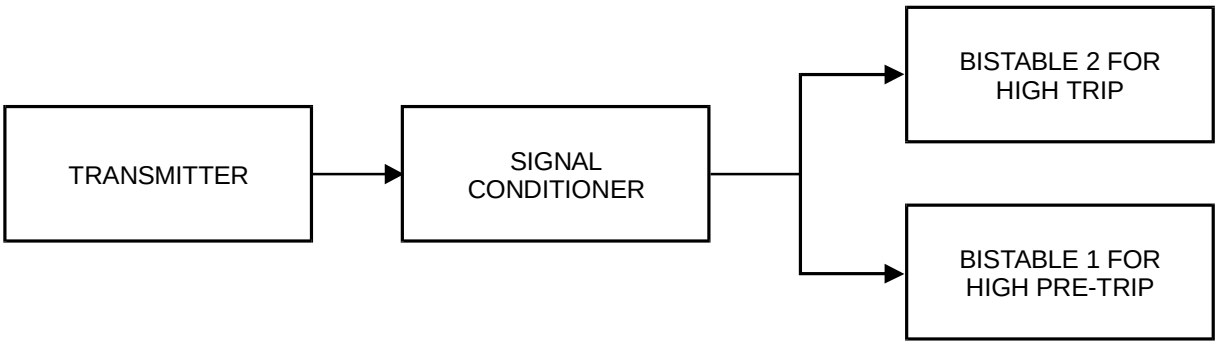

Figure 3 — Instrument channel layout for system having high pre-trip and high trip bistables driven by the same transmitter

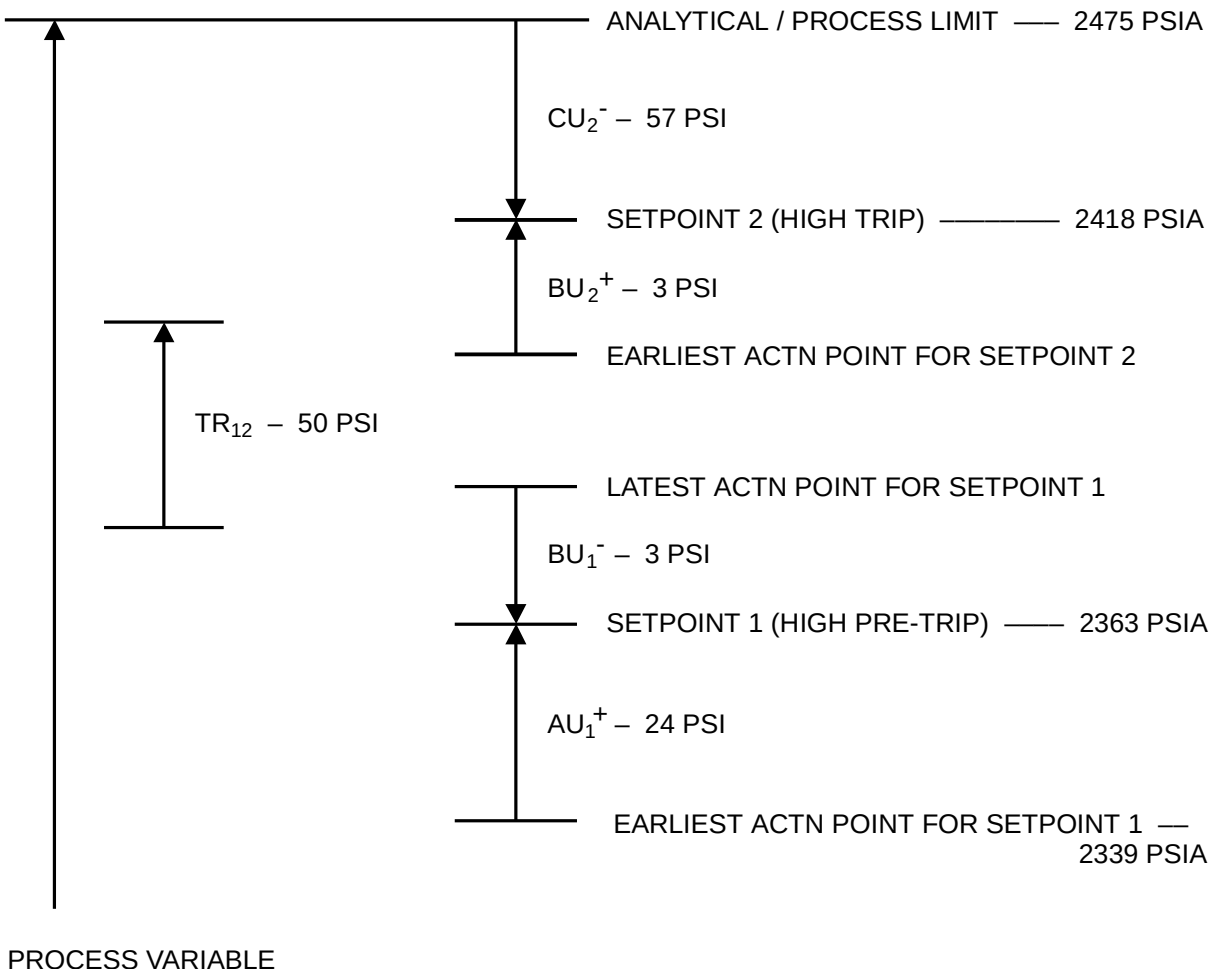

Figure 4 — Setpoint relationships for interrelating high pre-trip and high trip bistables driven by the same transmitter, with example values for a typical PWR pressurizer pressure system

Figure 4 also shows the earliest and latest actuation points for the high pre-trip setpoint, the earliest actuation point for the high trip setpoint, and the high analytical/process limit, together with the associated channel uncertainty for this type of system. (The setpoint margins are assumed to be zero in Figure 4.)

As a specific numerical example, the determination of the high trip and the high pre-trip setpoints and the minimum separation between them for a high pressurizer pressure trip channel in a PWR plant will be discussed in relation to Figures 3 and 4, and to Equation 3. The analytical limit is specified as 2475 psia, and if a restricted range transmitter with a calibrated span of 1500 to 2500 psia is used, the value for CU_2^- calculated by the methodology of ISA-RP67.04, Part II, is 57 psi. The maximum high trip setpoint is therefore (2475 - 57) = 2418 psia. If the values of BU_1^- and BU_2^+ are 3 psi each, with $BU_{1R}^- = BU_{2R}^+ = 2$ psi and $BU_{1B}^- = BU_{2B}^+ = 1$ psi, the minimum separation between the high pre-trip and high trip setpoints (with the SRSS values rounded to the closest whole number) will be $([2^2 + 2^2]^{1/2} + 1 + 1 + TR_{12}) = (5 + TR_{12})$ psi. On the basis of engineering and operations judgment, a value of 50 psi is assigned for TR_{12}, giving a minimum separation between setpoints of (5 + 50) = 55 psi. The high pre-trip setpoint thus becomes (2418 - 55) = 2363 psia. If the value of AU_1^+ is 24 psi, the earliest actuation point for this setpoint will be (2363 - 24) = 2339 psia. These example values are shown in Figure 4.

4.2.2 Interrelating high and low alarm setpoints derived from the same transmitter

The instrument channel layout for this type of system is shown in Figure 5, and the setpoint relationships are illustrated in Figure 6. Since both bistables are driven by the same transmitter and signal conditioner, but the operating band is traversed when the process variable goes from one setpoint to the other, AU_1^+ and AU_2^- usually will have values that are intermediate between those for the full channel uncertainties and those for the bistable uncertainties.

The following equations define the breakup of the appropriate uncertainty terms in Figure 6 into their components:

$$AU_1^+ = AU_{1R}^+ + AU_{1B}^+$$

$$AU_2^- = AU_{2R}^- + AU_{2B}^-$$

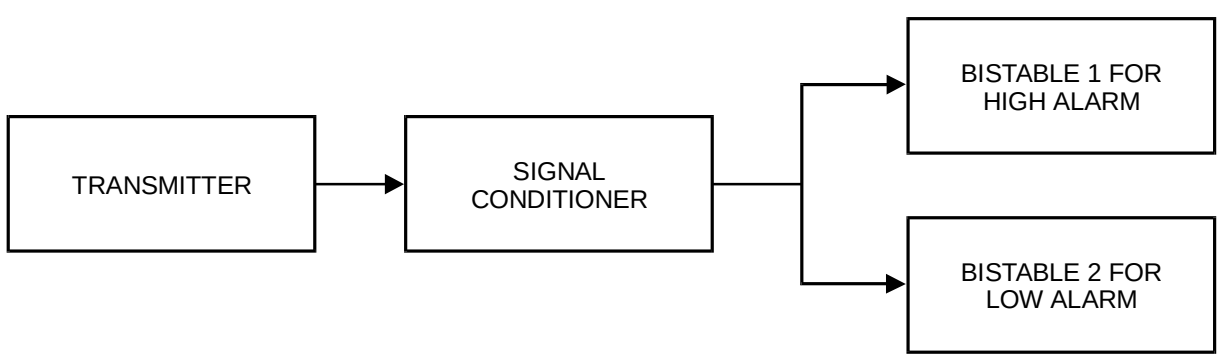

Figure 5 — Instrument channel layout for system having high and low alarm bistables driven by the same transmitter

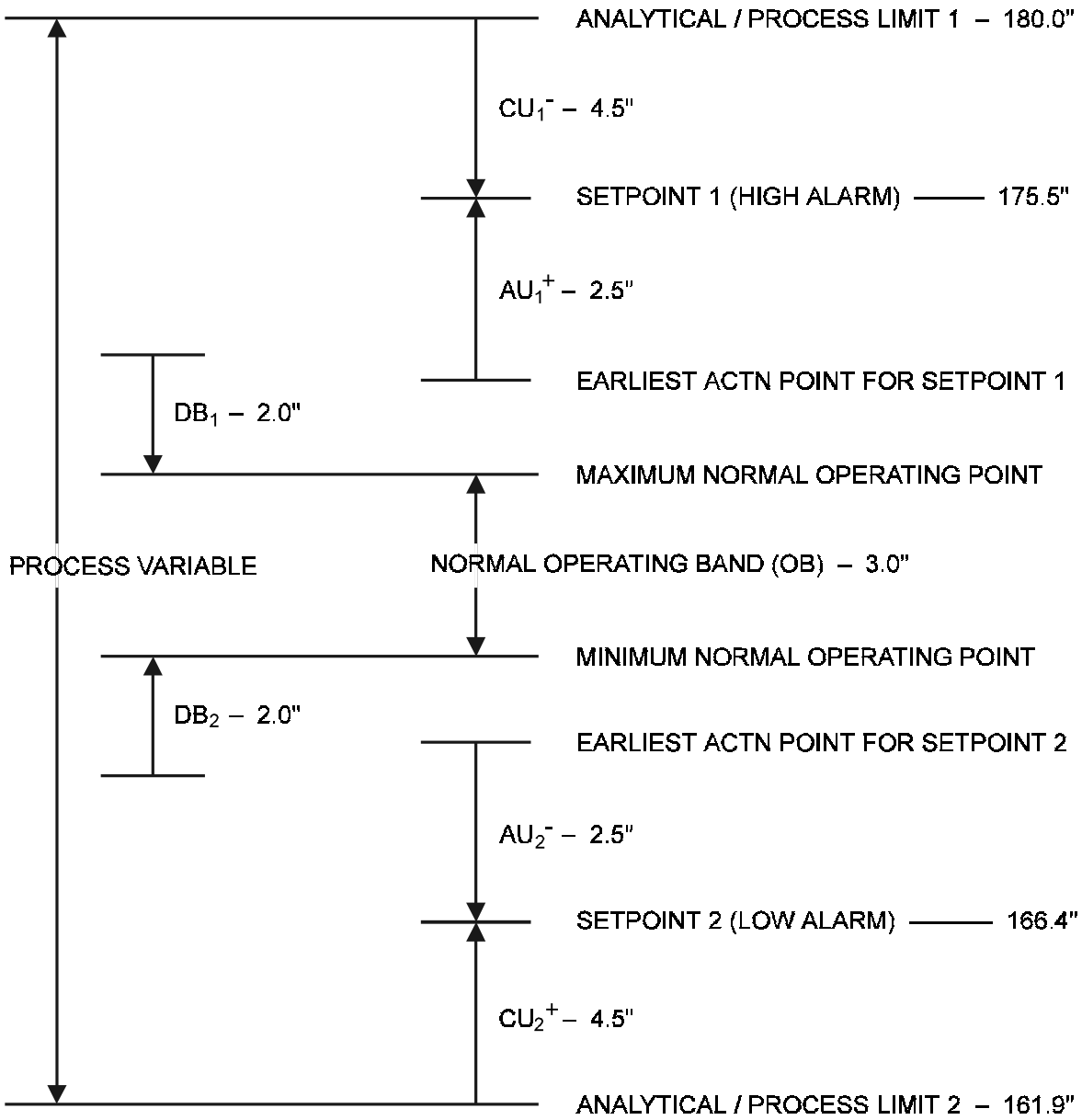

Figure 6 — Setpoint relationships for interrelating high and low alarm bistables driven by the same transmitter, with example values for a typical spray pond level system

The minimum separation between the setpoints may be expressed in an equation similar to Equation 2, as follows:

$$SR_{12} = ([AU_{1R}^{+}]^2 + [AU_{2R}^{-}]^2)^{1/2} + AU_{1B}^{+} + AU_{2B}^{-} + \max(DB_1, DB_2) + OB \qquad \text{(Eq. 4)}$$

where

SR_{12} = minimum separation between setpoint 1, the high alarm setpoint, and setpoint 2, the low alarm setpoint;

AU_{1R}^{+} = random component of AU_1, the applicable uncertainty for the high alarm setpoint, in the direction of setpoint 2;

AU_{2R}^{-} = random component of AU_2, the applicable uncertainty for the low alarm setpoint, in the direction of setpoint 1;

AU_{1B}^{+} = bias component of AU_1 in the direction of setpoint 2;

AU_{2B}^{-} = bias component of AU_2 in the direction of setpoint 1;

DB_1 = reset deadband for setpoint 1;

DB_2 = reset deadband for setpoint 2; and

OB = normal operating band of the process variable.

Figure 6 also shows the maximum and minimum normal operating points of the process variable, the earliest actuation points for the two setpoints, and the two analytical/process limits, together with the associated channel uncertainties for this type of system. (The setpoint margins are assumed to be zero in Figure 6.)

As a specific numerical example, the determination of the high alarm and the low alarm setpoints and the minimum separation between them for a spray pond level alarm system will be discussed in relation to Figures 5 and 6, and to Equation 4. The high process limit is specified as 180.0 inches, and the values of CU_1^{-} and CU_2^{+} calculated by the methodology of ISA-RP67.04, Part II, are each 4.5 inches. The maximum high alarm setpoint is therefore (180.0 - 4.5) = 175.5 inches. If (1) the values of AU_1^{+} and AU_2^{-} are each 2.5 inches, of which 1.5 inches are random components, and 1.0 are bias components; (2) it is desired that the low alarm setpoint be as high as possible without causing confusion between high and low alarms; (3) the minimum reset deadbands for the two bistables are each 2.0 inches; and (4) the desired normal operating band is 3.0 inches, then the minimum separation between the setpoints using Equation 4 would be $([1.5^2 + 1.5^2]^{1/2} + 1.0 + 1.0 + 2.0 + 3.0) = 9.1$ inches. The maximum low alarm setpoint would then be (175.5 - 9.1) = 166.4 inches, which would be satisfactory if the process low level limit is no higher than (166.4 - 4.5) = 161.9 inches. These example values are shown in Figure 6.

4.2.3 Interrelating high and low pre-trip and trip setpoints derived from the same or different transmitters

These types of systems are a combination/extension of the types of systems discussed in 4.2.1 and 4.2.2. They may use a single transmitter, as shown in Figure 7, or there may be separate transmitters for the high and low actions, as shown in Figure 8. In both cases, the applicable setpoint relationships will be as illustrated in Figure 9, but the values of the terms may differ due to the configurations and the types of transmitters used.

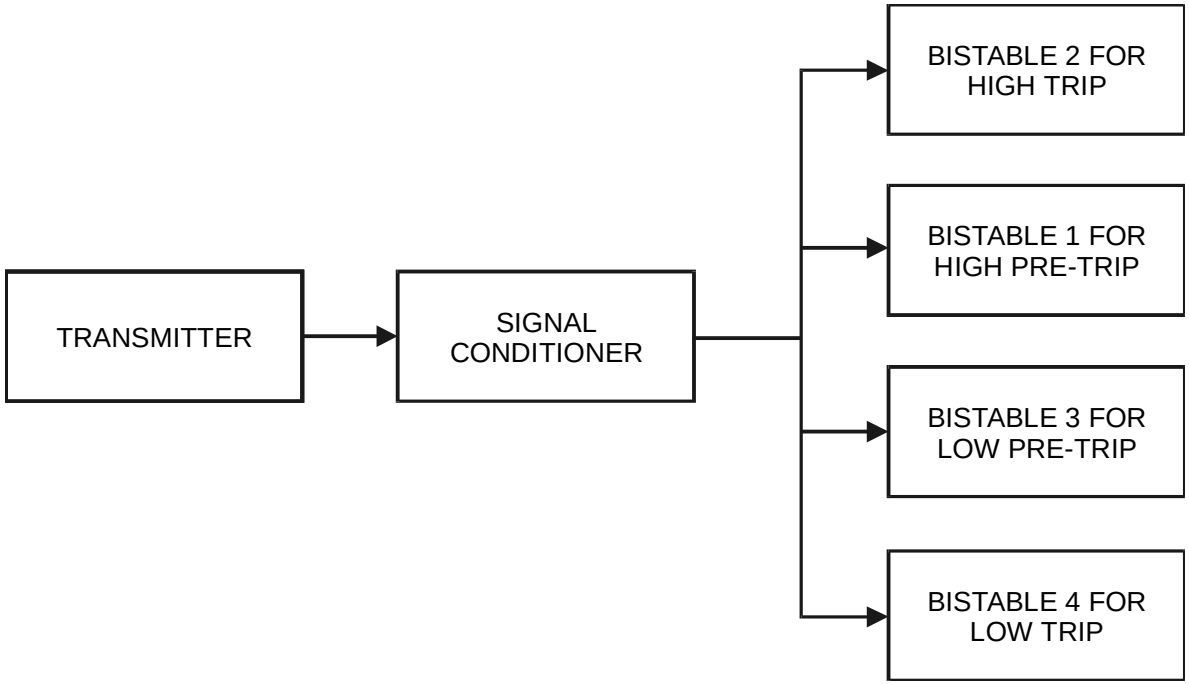

Figure 7 — Instrument channel layout for system having high and low pre-trip and trip bistables all driven by the same transmitter

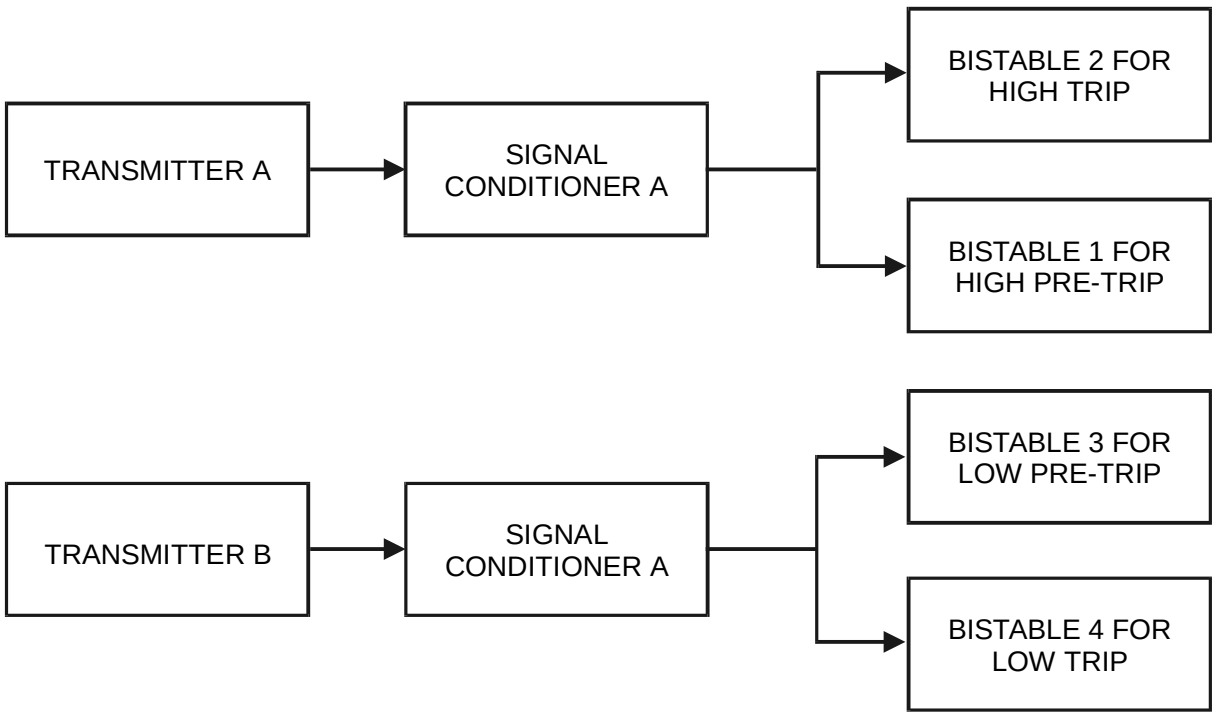

Figure 8 — Instrument channel layout for system having high pre-trip and trip bistables driven by one transmitter and low pre-trip and trip bistables driven by a different transmitter

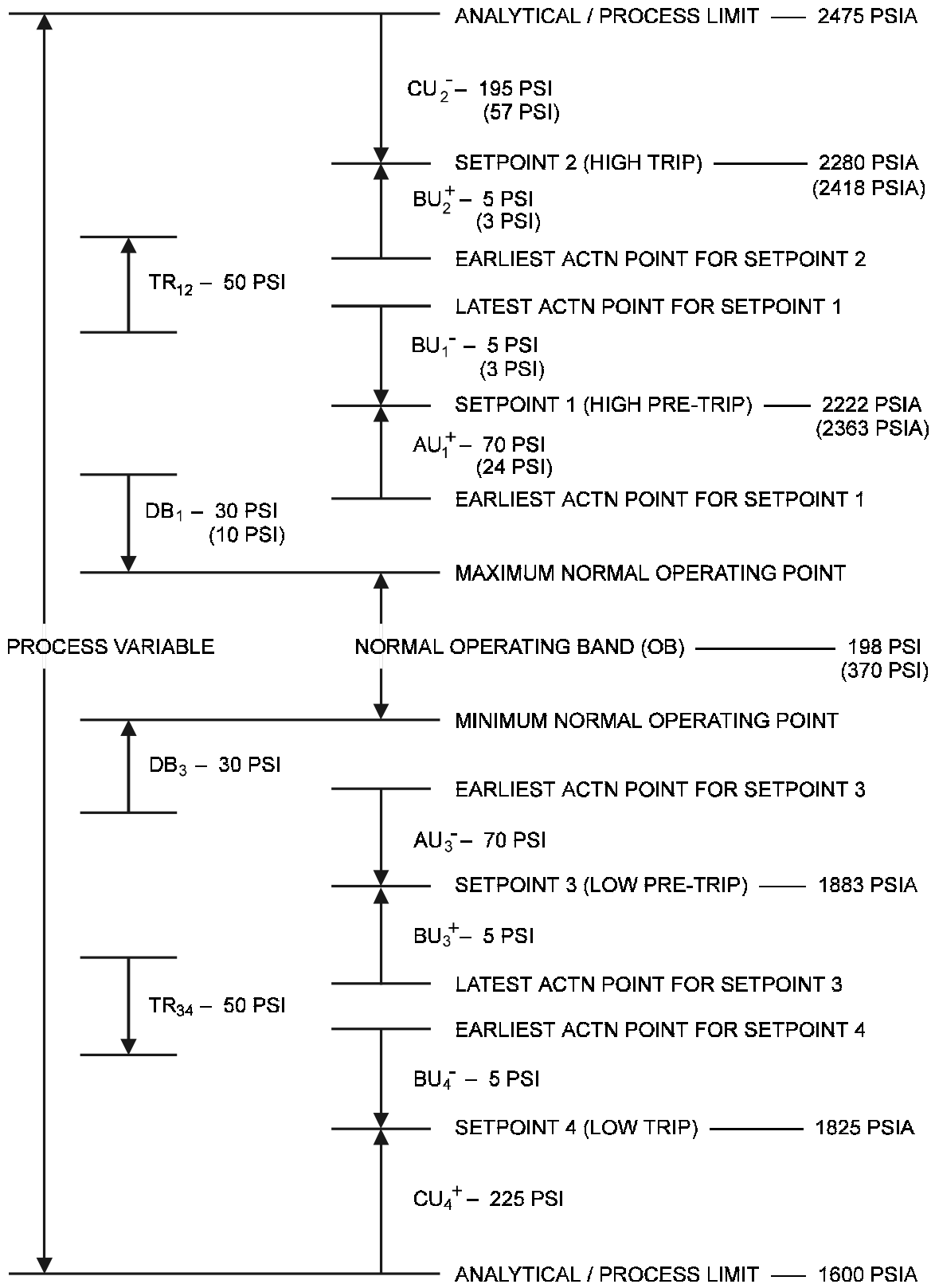

Figure 9 — Setpoint relationships for interrelating high and low pre-trip and trip bistables driven by the same or different transmitters, with example values for typical PWR pressurizer pressure systems

There are three minimum separations involved, as defined by the following equations:

$$SR_{12} = ([BU_{1R}^{-}]^2 + [BU_{2R}^{+}]^2)^{1/2} + BU_{1B}^{-} + BU_{2B}^{+} + TR_{12} \qquad \text{(Same as Eq. 3)}$$

$$SR_{13} = ([AU_{1R}^{+}]^2 + [AU_{3R}^{-}]^2)^{1/2} + AU_{1B}^{+} + AU_{3B}^{-} + \max(DB_1, DB_3) + OB \qquad \text{(Eq. 5)}$$

where

SR_{13} = minimum separation between setpoint 1, the high pre-trip setpoint, and setpoint 3, the low pre-trip setpoint;

AU_{1R}^{+} = random component of AU_1,the applicable uncertainty for the high pre-trip setpoint, in the direction of setpoint 3;

AU_{3R}^{-} = random component of AU_3, the applicable uncertainty for the low pre-trip setpoint, in the direction of setpoint 1;

AU_{1B}^{+} = bias component of AU_1 in the direction of setpoint 3;

AU_{3B}^{-} = bias component of AU_3 in the direction of setpoint 1;

DB_1 = reset deadband for setpoint 1;

DB_3 = reset deadband for setpoint 3; and

OB = normal operating band of the process variable.

$$SR_{34} = ([BU_{3R}^{+}]^2 + [BU_{4R}^{-}]^2)^{1/2} + BU_{3B}^{+} + BU_{4B}^{-} + TR_{34} \qquad \text{(Eq. 6)}$$

where

SR_{34} = minimum separation between setpoint 3, the low pre-trip setpoint, and setpoint 4, the low trip setpoint;

BU_{3R}^{+} = random component of BU_3, the bistable uncertainty for the low pre-trip setpoint, in the direction of setpoint 4;

BU_{4R}^{-} = random component of BU_4, the bistable uncertainty for the low trip setpoint, in the direction of setpoint 3;

BU_{3B}^{+} = bias component of BU_3 in the direction of setpoint 4;

BU_{4B}^{-} = bias component of BU_4 in the direction of setpoint 3; and

TR_{34} = bias time response term to account for plant operator actions and equipment response times to avoid a low trip after receiving a low pre-trip alarm.

Figure 9 also shows the maximum and minimum normal operating points of the process variable, the earliest and latest actuation points for the setpoints, and the two analytical/process limits, together with the associated channel uncertainties for these types of systems. (The setpoint margins are again assumed to be zero.)

As specific numerical examples for these types of systems, the determinations of the setpoints and the minimum separations between the setpoints for pressurizer pressure in a PWR will be discussed in relation to Figures 7, 8, and 9 and to Equations 3, 5, and 6. The high analytical limit in each case is 2475 psia, the same as used in the example of 4.2.1, and the low analytical limit in each case is 1600 psia.

If a single, full-range transmitter calibrated for 0 to 3000 psia is used in the channel layout of Figure 7, the value of CU_2^- calculated by the methodology of ISA-RP67.04, Part II, is 195 psi, and that of CU_4^+ is 225 psi. The maximum high trip setpoint is therefore (2475 - 195) = 2280 psia, and the minimum low trip setpoint is (1600 + 225) = 1825 psia. If the values of BU_1^- and BU_2^+ are 5 psi each, with $BU_{1R}^- = BU_{2R}^+ = 3$ psi and $BU_{1B}^- = BU_{2B}^+ = 2$ psi, the minimum separation between the high pre-trip and high trip setpoints (with the SRSS values rounded to the closest whole number) will be $([3^2 + 3^2]^{1/2} + 2 + 2 + TR_{12}) = (8 + TR_{12})$ psi. If a value of 50 psi is again assigned to TR_{12}, this separation will be 58 psi, and the maximum high pre-trip setpoint will be (2280 - 58) = 2222 psia. If the values of BU_3^+ and BU_4^- are also 5 psi each, with $BU_{3R}^+ = BU_{4R}^- = 3$ psi and $BU_{3B}^+ = BU_{4B}^- = 2$ psi, and if the value of 50 psi is used for TR_{34}, the minimum separation between the low pre-trip and low trip setpoints will again be $([3^2 + 3^2]^{1/2} + 2 + 2 + 50) = 58$ psi, and the minimum low pre-trip setpoint will be (1825 + 58) = 1883 psia. The maximum separation between the high pre-trip and the low pre-trip setpoints in this system can therefore be no more than (2222 - 1883) = 339 psi. If the calculated values of AU_1^+ and AU_3^- are each 70 psi, with $AU_{1R}^+ = AU_{3R}^- = 50$ psi and $AU_{1B}^+ = AU_{3B}^- = 20$ psi, and if the minimum reset deadbands for bistables 1 and 3 are each 30 psi, the maximum value for the normal operating band will be $(339 - [50^2 + 50^2]^{1/2} - 20 - 20 - 30) = (339 - 141) = 198$ psi. The values for this example are shown in Figure 9 as the ones not in parentheses.

However, if the channel layout of Figure 8 is utilized, with a restricted range transmitter having a calibrated span of 1500 to 2500 psia used to drive the high trip and high pre-trip bistables and the full-range transmitter used to drive the low pre-trip and low trip bistables, the results are somewhat different. The calculated value of CU_2^- becomes 57 psi, and the maximum high trip setpoint is now (2475 - 57) = 2418 psia. Also, the values of BU_1^- and BU_2^+ become 3 psi each, with $BU_{1R}^- = BU_{2R}^+ = 2$ psi and $BU_{1B}^- = BU_{2B}^+ = 1$ psi, so the minimum separation between the high pre-trip and high trip setpoints will be reduced to 55 psi, and the maximum high pre-trip setpoint will be (2418 - 55) = 2363 psia. The maximum separation between the high pre-trip and the low pre-trip setpoints increases to (2363 - 1883) = 480 psi. The value of AU_1^+ decreases to 24 psi, with AU_{1R}^+ becoming 17 psi and AU_{1B}^+ becoming 7 psi, so the maximum value for the normal operating band increases to $(480 - [17^2 + 50^2])^{1/2} - 7 - 20 - 30) = (480 - 110) = 370$ psi. The values for this example that are different from those for the Figure 7 layout are shown in parentheses in Figure 9.

4.2.4 Interrelating high and low alarm and low-low trip setpoints derived from different transmitters

The final type of system to be discussed has an instrument channel layout as shown in Figure 10 and has setpoint relationships as illustrated in Figure 11. It differs from the other types of systems in that separate transmitters are used to drive the low alarm and the low-low trip bistables. AU_2^+ and AU_3^- will therefore have values that are fairly close to the full channel uncertainties.

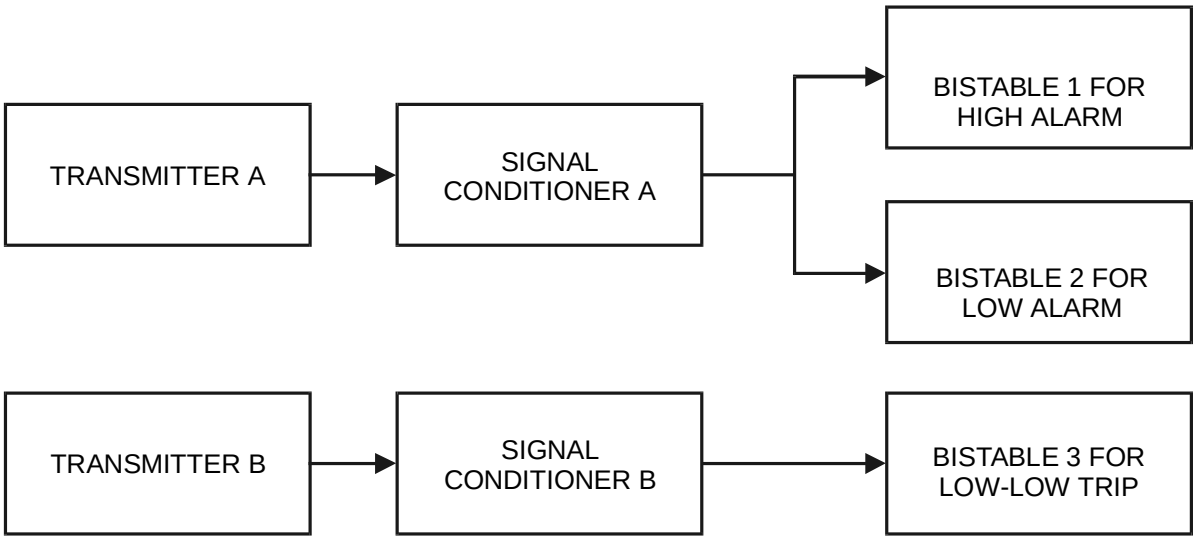

Figure 10 — Instrument channel layout for system having high and low alarm bistables driven by one transmitter and a low-low trip bistable driven by a different transmitter

The minimum separations between the setpoints may be expressed by the following equations:

$$SR_{12} = ([AU_{1R}^{+}]^2 + [AU_{2R}^{-}]^2)^{1/2} + AU_{1B}^{+} + AU_{2B}^{-} + \max(DB_1, DB_2) + OB \qquad \text{(Same as Eq. 4)}$$

$$SR_{23} = ([AU_{2R}^{+}]^2 + [AU_{3R}^{-}]^2)^{1/2} + AU_{2B}^{+} + AU_{3B}^{-} + TR_{23} \qquad \text{(Eq. 7)}$$

where

SR_{23} = minimum separation between setpoint 2, the low alarm setpoint, and setpoint 3, the low-low trip setpoint;

AU_{2R}^{+} = random component of AU_2, the applicable uncertainty for the low alarm setpoint, in the direction of setpoint 3;

AU_{3R}^{-} = random component of AU_3, the applicable uncertainty for the low-low trip setpoint, in the direction of setpoint 2;

AU_{2B}^{+} = bias component of AU_2 in the direction of setpoint 3;

AU_{3B}^{-} = bias component of AU_3 in the direction of setpoint 2; and

TR_{23} = bias time response term to account for plant operator actions and equipment response times to avoid a low-low trip after receiving a low alarm.

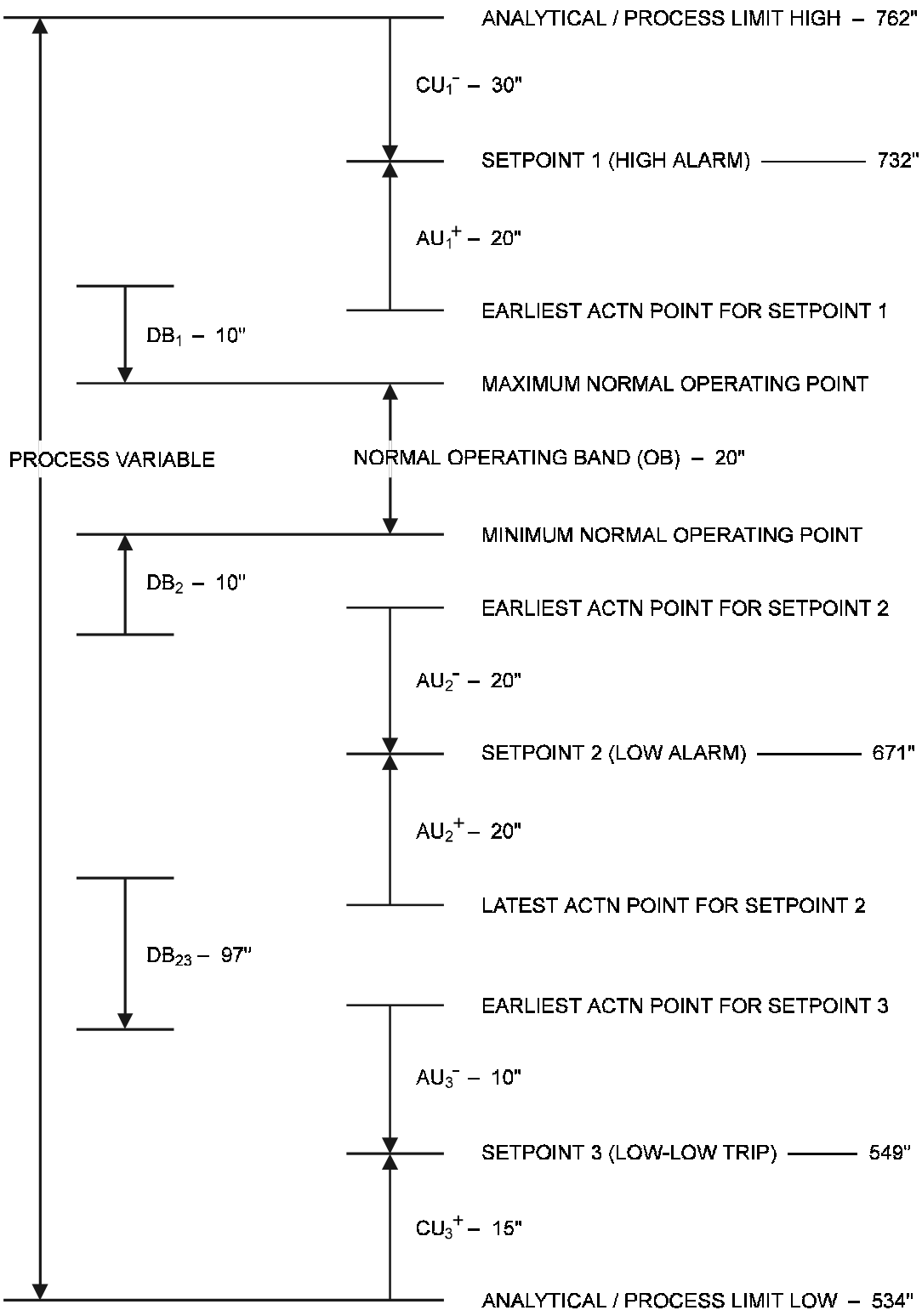

Figure 11 — Setpoint relationships for interrelating high and low alarm bistables driven by one transmitter and a relating low-low trip bistable driven by a different transmitter, with example values for a typical refueling water tank level system

Figure 11 also shows the maximum and minimum normal operating points of the process variable, the earliest and latest actuation points for the setpoints, and the two analytical/process limits, together with the associated channel uncertainties for this type of system. (The setpoint margins are assumed to be zero in Figure 11.)

As a specific numerical example for this type of system, the determination of the setpoints and the minimum separations between the setpoints for refueling water tank level will be discussed in relation to Figures 10 and 11 and to Equations 4 and 7. The high process limit is specified as 762 inches, and the low analytical limit is 534 inches. The value of CU_1^- calculated by the methodology of ISA-RP67.04, Part II, is 30 inches, and that of CU_3^+ is 15 inches. The maximum high alarm setpoint is therefore (762 - 30) = 732 inches, and the minimum low-low trip setpoint is (534 + 15) = 549 inches. The calculated value of AU_1^+ is 20 inches, with AU_{1R}^+ being 15 inches, and AU_{1B}^+ being 5 inches, and that of AU_2^- is also 20 inches, with AU_{2R}^- being 15 inches, and AU_{2B}^- being 5 inches. The reset deadbands for bistables 1 and 2 are 10 inches, and the operating band is specified as 20 inches, which leads to a minimum separation between the high and low alarm setpoints of $([15^2 + 15^2])^{1/2} + 5 + 5 + 10 + 20) = 61$ inches. The low alarm setpoint is therefore (732 - 61) = 671 inches, and the separation between the low alarm and the low-low trip setpoints is (671 - 549) = 122 inches. The calculated value of AU_2^+ is 20 inches, with AU_{2R}^+ being 15 inches and AU_{2B}^+ being 5 inches, and that of AU_3^- is 10 inches, with AU_{3R}^- being 7 inches and AU_{3B}^- being 3 inches, which leads to a value of $(122 - [15^2 + 7^2]^{1/2} - 5 - 3) = 97$ inches for the maximum value of TR_{23}. These example values are shown in Figure 11.

Annex A — (informative) References

ISA

ANSI/ISA-S67.04, Part I	Setpoints for Nuclear Safety-Related Instrumentation, 1994
ISA-RP67.04, Part II	Methodologies for the Determination of Setpoints for Nuclear Safety-Related Instrumentation, 1994
Available from:	**ISA** 67 Alexander Drive P.O. Box 12277 Research Triangle Park, NC 27709 Tel: (919) 990-9200

MISCELLANEOUS

Blomquist, M.J., Bjornn, K. R. and Green, R. E., “Applying ISA Recommended Practice 67.04 to Setpoint Calculations,” *ISA Proceedings, Instrumentation, Controls, and Automation in the Power Industry*, Volume 34, 1991.

Developing and promulgating technically sound consensus standards, recommended practices, and technical reports is one of ISA's primary goals. To achieve this goal the Standards and Practices Department relies on the technical expertise and efforts of volunteer committee members, chairmen, and reviewers.

ISA is an American National Standards Institute (ANSI) accredited organization. ISA administers United States Technical Advisory Groups (USTAGs) and provides secretariat support for International Electrotechnical Commission (IEC) and International Organization for Standardization (ISO) committees that develop process measurement and control standards. To obtain additional information on the Society's standards program, please write:

ISA
Attn: Standards Department
67 Alexander Drive
P.O. Box 12277
Research Triangle Park, NC 27709

ISBN: 1-55617-591-4